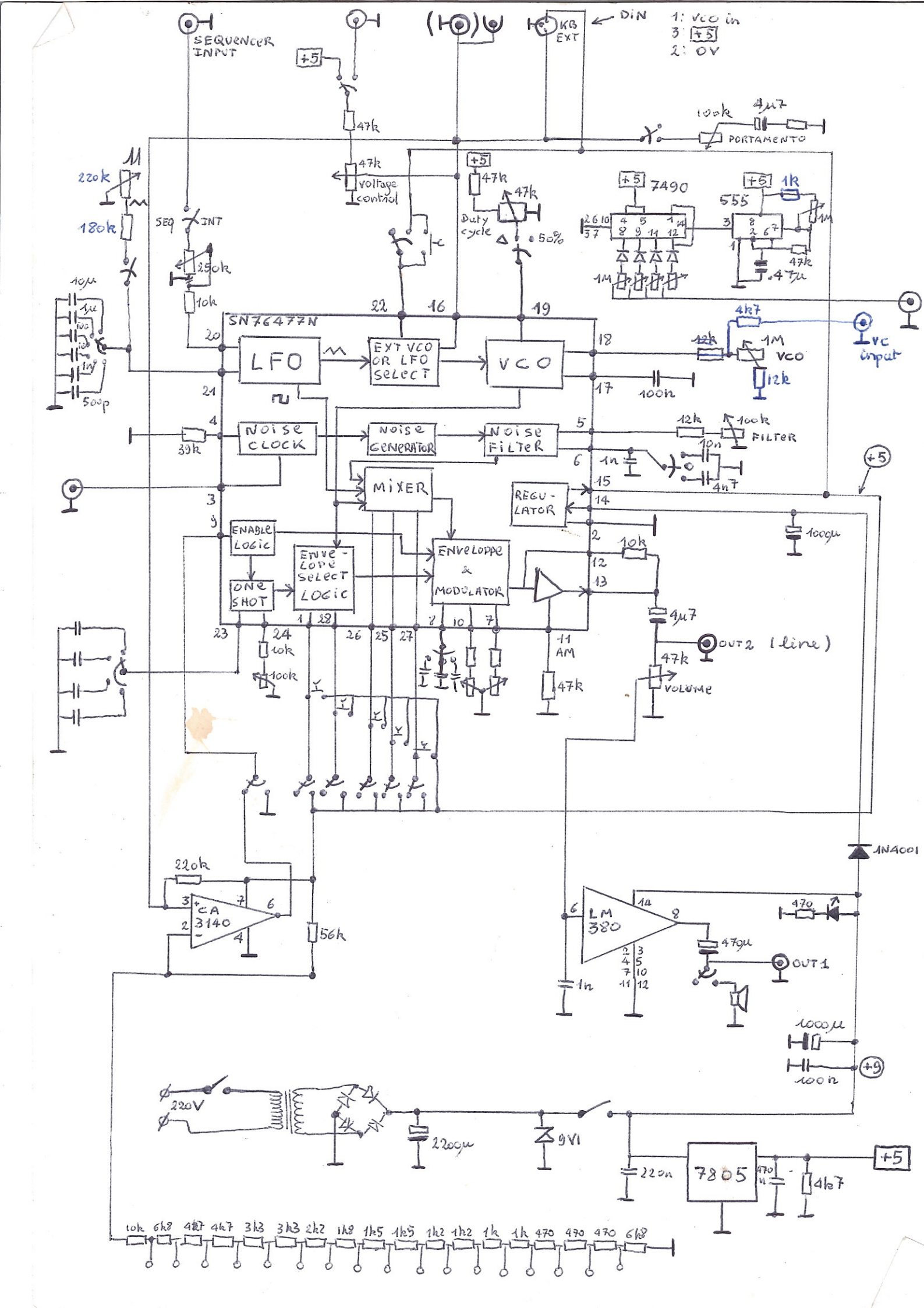
SEQUENCER INPUT
KB EXT
DIN
1: VCO in
3: +5
2: 0V
PORTAMENTO
100k
4µ7
47k
voltage control
220k
180k
SEQ
INT
250k
10k
10µ
1µ
100
10n
1n
500p
Duty cycle
50%
7490
555
1k
1M
47k
.47µ
SN76477N
LFO
EXT VCO OR LFO SELECT
VCO
4k7
12k
VCO
VC input
100n
NOISE CLOCK
NOISE GENERATOR
NOISE FILTER
39k
FILTER
10n
4n7
MIXER
REGU-LATOR
ENABLE LOGIC
ENVE-LOPE SELECT LOGIC
ONE SHOT
ENVELOPPE & MODULATOR
AM
OUT2 (line)
VOLUME
1000µ
1N4001
CA 3140
56k
LM 380
470
470µ
OUT1
1n
100n
220V
220µ
9V1
220n
7805
10k 6k8 4k7 4k7 3k3 3k3 2k2 1k8 1k5 1k5 1k2 1k2 1k 1k 470 470 470 6k8